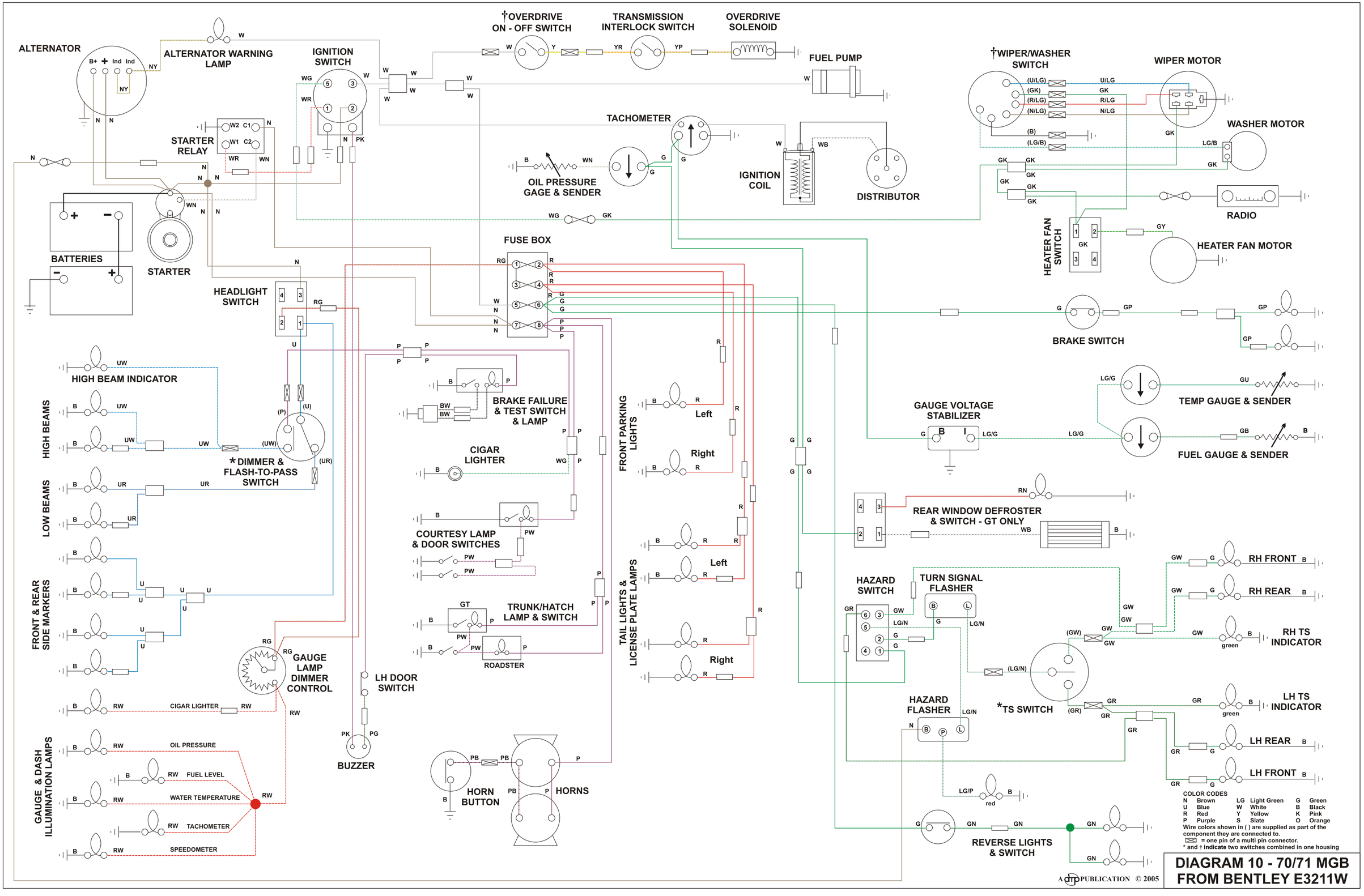
ALTERNATOR
B+ + Ind Ind
NY
ALTERNATOR WARNING LAMP
IGNITION SWITCH
WG WR
STARTER RELAY
W2 C1 W1 C2
WR WN
BATTERIES
STARTER
WN
†OVERDRIVE ON - OFF SWITCH
TRANSMISSION INTERLOCK SWITCH
OVERDRIVE SOLENOID
FUEL PUMP
TACHOMETER
OIL PRESSURE GAGE & SENDER
IGNITION COIL
DISTRIBUTOR
WG GK
FUSE BOX
RG
HEADLIGHT SWITCH
HIGH BEAM INDICATOR
UW
HIGH BEAMS
LOW BEAMS
UR
*DIMMER & FLASH-TO-PASS SWITCH
(P) (U) (UW) (UR)
FRONT & REAR SIDE MARKERS
GAUGE LAMP DIMMER CONTROL
CIGAR LIGHTER
RW
GAUGE & DASH ILLUMINATION LAMPS
OIL PRESSURE
FUEL LEVEL
WATER TEMPERATURE
TACHOMETER
SPEEDOMETER
BRAKE FAILURE & TEST SWITCH & LAMP
BW
CIGAR LIGHTER
COURTESY LAMP & DOOR SWITCHES
PW
TRUNK/HATCH LAMP & SWITCH
GT
ROADSTER
LH DOOR SWITCH
PK PG
BUZZER
PB
HORN BUTTON
HORNS
FRONT PARKING LIGHTS
Left
Right
TAIL LIGHTS & LICENSE PLATE LAMPS
†WIPER/WASHER SWITCH
(U/LG) (GK) (R/LG) (N/LG) (B) (LG/B)
U/LG GK R/LG N/LG
WIPER MOTOR
WASHER MOTOR
LG/B
RADIO
HEATER FAN SWITCH
GY
HEATER FAN MOTOR
BRAKE SWITCH
GP
GAUGE VOLTAGE STABILIZER
LG/G
TEMP GAUGE & SENDER
GU
FUEL GAUGE & SENDER
GB
REAR WINDOW DEFROSTER & SWITCH - GT ONLY
RN
WB
HAZARD SWITCH
TURN SIGNAL FLASHER
GW
LG/N
RH FRONT
RH REAR
RH TS INDICATOR
(GW)
green
*TS SWITCH
(LG/N)
(GR)
LH TS INDICATOR
HAZARD FLASHER
LH REAR
LH FRONT
LG/P
red
REVERSE LIGHTS & SWITCH
GN
COLOR CODES
N Brown LG Light Green G Green
U Blue W White B Black
R Red Y Yellow K Pink
P Purple S Slate O Orange
Wire colors shown in ( ) are supplied as part of the component they are connected to.
= one pin of a multi pin connector.
* and † indicate two switches combined in one housing
A PUBLICATION © 2005
DIAGRAM 10 - 70/71 MGB
FROM BENTLEY E3211W