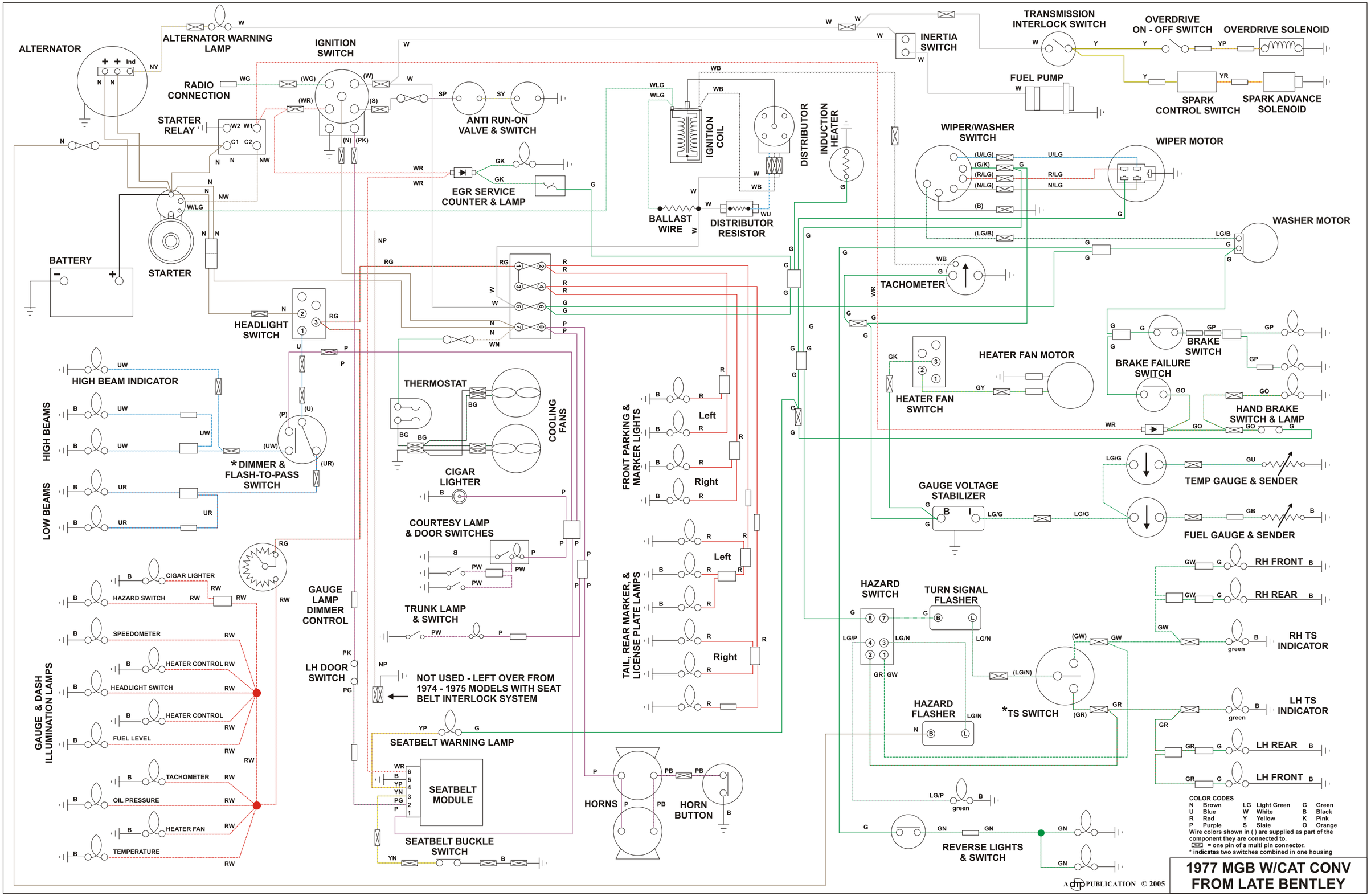
ALTERNATOR
ALTERNATOR WARNING LAMP
IGNITION SWITCH
RADIO CONNECTION
STARTER RELAY
STARTER
BATTERY
ANTI RUN-ON VALVE & SWITCH
EGR SERVICE COUNTER & LAMP
IGNITION COIL
DISTRIBUTOR
INDUCTION HEATER
BALLAST WIRE
DISTRIBUTOR RESISTOR
INERTIA SWITCH
TRANSMISSION INTERLOCK SWITCH
OVERDRIVE ON - OFF SWITCH
OVERDRIVE SOLENOID
FUEL PUMP
SPARK CONTROL SWITCH
SPARK ADVANCE SOLENOID
WIPER/WASHER SWITCH
WIPER MOTOR
WASHER MOTOR
TACHOMETER
HEADLIGHT SWITCH
HIGH BEAM INDICATOR
HIGH BEAMS
LOW BEAMS
* DIMMER & FLASH-TO-PASS SWITCH
THERMOSTAT
COOLING FANS
CIGAR LIGHTER
COURTESY LAMP & DOOR SWITCHES
TRUNK LAMP & SWITCH
GAUGE LAMP DIMMER CONTROL
LH DOOR SWITCH
NOT USED - LEFT OVER FROM 1974 - 1975 MODELS WITH SEAT BELT INTERLOCK SYSTEM
SEATBELT WARNING LAMP
SEATBELT MODULE
SEATBELT BUCKLE SWITCH
GAUGE & DASH ILLUMINATION LAMPS
CIGAR LIGHTER
HAZARD SWITCH
SPEEDOMETER
HEATER CONTROL
HEADLIGHT SWITCH
HEATER CONTROL
FUEL LEVEL
TACHOMETER
OIL PRESSURE
HEATER FAN
TEMPERATURE
FRONT PARKING & MARKER LIGHTS
Left
Right
TAIL, REAR MARKER, & LICENSE PLATE LAMPS
Left
Right
HORNS
HORN BUTTON
HEATER FAN MOTOR
HEATER FAN SWITCH
BRAKE SWITCH
BRAKE FAILURE SWITCH
HAND BRAKE SWITCH & LAMP
GAUGE VOLTAGE STABILIZER
TEMP GAUGE & SENDER
FUEL GAUGE & SENDER
HAZARD SWITCH
TURN SIGNAL FLASHER
HAZARD FLASHER
*TS SWITCH
RH FRONT
RH REAR
RH TS INDICATOR
LH TS INDICATOR
LH REAR
LH FRONT
REVERSE LIGHTS & SWITCH
COLOR CODES
N Brown LG Light Green G Green
U Blue W White B Black
R Red Y Yellow K Pink
P Purple S Slate O Orange
Wire colors shown in ( ) are supplied as part of the component they are connected to.
= one pin of a multi pin connector.
* indicates two switches combined in one housing
A CTP PUBLICATION © 2005
1977 MGB W/CAT CONV
FROM LATE BENTLEY