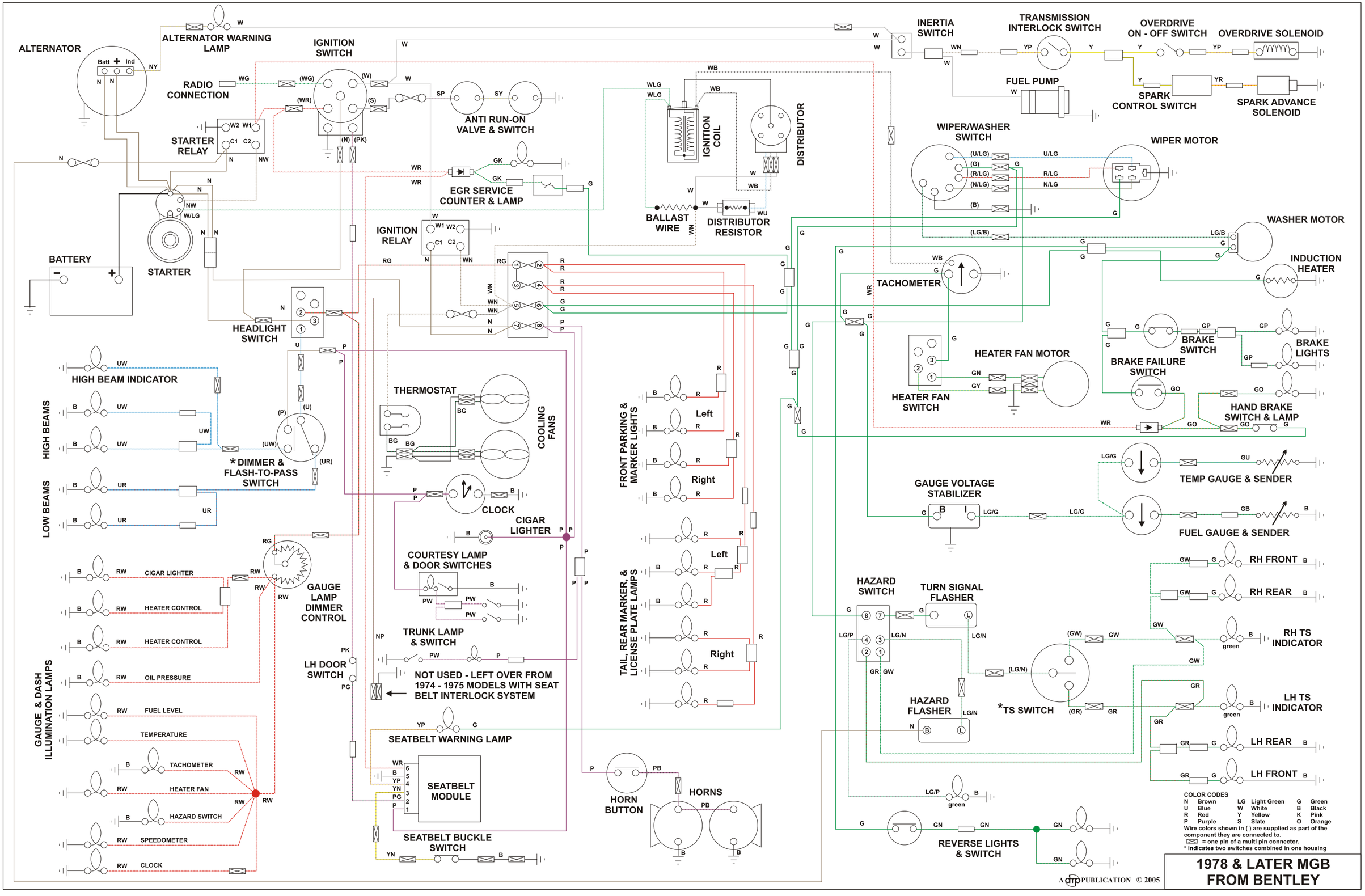
ALTERNATOR
Batt + Ind
ALTERNATOR WARNING LAMP
IGNITION SWITCH
RADIO CONNECTION
STARTER RELAY
W2 W1
C1 C2
STARTER
BATTERY
ANTI RUN-ON VALVE & SWITCH
EGR SERVICE COUNTER & LAMP
IGNITION RELAY
HEADLIGHT SWITCH
HIGH BEAM INDICATOR
HIGH BEAMS
LOW BEAMS
* DIMMER & FLASH-TO-PASS SWITCH
THERMOSTAT
COOLING FANS
CLOCK
CIGAR LIGHTER
COURTESY LAMP & DOOR SWITCHES
GAUGE LAMP DIMMER CONTROL
TRUNK LAMP & SWITCH
LH DOOR SWITCH
NOT USED - LEFT OVER FROM 1974 - 1975 MODELS WITH SEAT BELT INTERLOCK SYSTEM
SEATBELT WARNING LAMP
SEATBELT MODULE
SEATBELT BUCKLE SWITCH
GAUGE & DASH ILLUMINATION LAMPS
CIGAR LIGHTER
HEATER CONTROL
HEATER CONTROL
OIL PRESSURE
FUEL LEVEL
TEMPERATURE
TACHOMETER
HEATER FAN
HAZARD SWITCH
SPEEDOMETER
CLOCK
IGNITION COIL
DISTRIBUTOR
BALLAST WIRE
DISTRIBUTOR RESISTOR
FRONT PARKING & MARKER LIGHTS
Left
Right
TAIL, REAR MARKER, & LICENSE PLATE LAMPS
Left
Right
HORN BUTTON
HORNS
INERTIA SWITCH
TRANSMISSION INTERLOCK SWITCH
OVERDRIVE ON - OFF SWITCH
OVERDRIVE SOLENOID
FUEL PUMP
SPARK CONTROL SWITCH
SPARK ADVANCE SOLENOID
WIPER/WASHER SWITCH
WIPER MOTOR
WASHER MOTOR
INDUCTION HEATER
TACHOMETER
HEATER FAN MOTOR
HEATER FAN SWITCH
BRAKE SWITCH
BRAKE LIGHTS
BRAKE FAILURE SWITCH
HAND BRAKE SWITCH & LAMP
GAUGE VOLTAGE STABILIZER
TEMP GAUGE & SENDER
FUEL GAUGE & SENDER
HAZARD SWITCH
TURN SIGNAL FLASHER
HAZARD FLASHER
*TS SWITCH
RH FRONT
RH REAR
RH TS INDICATOR
LH TS INDICATOR
LH REAR
LH FRONT
REVERSE LIGHTS & SWITCH
COLOR CODES
N Brown LG Light Green G Green
U Blue W White B Black
R Red Y Yellow K Pink
P Purple S Slate O Orange
Wire colors shown in ( ) are supplied as part of the component they are connected to.
= one pin of a multi pin connector.
* indicates two switches combined in one housing
A MGP PUBLICATION © 2005
1978 & LATER MGB FROM BENTLEY